Overview of Small Modular and Advanced Nuclear Reactors and Their Role in the Energy Transition

Jonas Kristiansen Nøland[1], Martin Hjelmeland[1], Christian Hartmann[1], Lina Bertling Tjernberg[1], and Magnus Korpås[1]

[1]Affiliation not available

April 16, 2024

Abstract

There is an unprecedented need to expand the toolbox of solutions to boost the scalability of clean power and energy systems. Amidst this challenge, nuclear energy is increasingly recognized as an important player in the path toward deep decarbonization of the global energy mix. This paper presents a technology review of small modular reactor (SMR) concepts currently under development and deployment. Both conventional and next-generation reactor technologies are evaluated with a focus on potential power system integration benefits, added system values, and provision of system-bearing services. Nevertheless, there are currently some uncertainties in the techno-economic competitiveness of SMRs, whether they can leverage economics of mass production over their inherent lack of economics of scale. To address this challenge, our paper provides some basic cost analysis of SMRs, taking into account their expected learning curves to evaluate the cost of future deployments and give insights into their economic competitiveness and potential role as a disruptive solution in the energy transition.

Overview of Small Modular and Advanced Nuclear Reactors and Their Role in the Energy Transition

Jonas Kristiansen Nøland, *Senior Member, IEEE,* Martin N. Hjelmeland, *Member, IEEE,* Christian Hartmann *Member, IEEE,* Lina Bertling Tjernberg, *Senior Member, IEEE,* and Magnus Korpås *Member, IEEE*

***Abstract*—There is an unprecedented need to expand the toolbox of solutions to boost the scalability of clean power and energy systems. Amidst this challenge, nuclear energy is increasingly recognized as an important player in the path toward deep decarbonization of the global energy mix. This paper presents a technology review of small modular reactor (SMR) concepts currently under development and deployment. Both conventional and next-generation reactor technologies are evaluated with a focus on potential power system integration benefits, added system values, and provision of system-bearing services. Nevertheless, there are currently some uncertainties in the techno-economic competitiveness of SMRs, whether they can leverage economics of mass production over their inherent lack of economics of scale. To address this challenge, our paper provides some basic cost analysis of SMRs, taking into account their expected learning curves to evaluate the cost of future deployments and give insights into their economic competitiveness and potential role as a disruptive solution in the energy transition.**

***Index Terms*—Nuclear energy, generation III+ reactors, generation IV reactors, light-water reactors (LWRs), small modular reactors (SMRs), advanced modular reactors (AMRs), power system integration, techno-economic evaluation.**

Nomenclature

γ	Total capital investment cost factor, $[-]$
LCOE	Levelized cost of electricity, $[\$/\mathrm{MWh}]$
OPEX	Operational cost to produce electricity, $[\$/\mathrm{MWh}]$
C	Overnight construction cost, $[\$]$
c	Normalized overnight construction cost, $[\$/\mathrm{kW}]$
K	Capacity factor, $[\mathrm{pu}]$ or $[\%]$
k	Construction cost scaling coefficient, $[-]$
N	Number of years of operation, $[-]$
n	Number of units constructed, $[-]$
P	Electrical power capacity, $[\mathrm{MW}]$
p_b	Base electricity price, $[\$/\mathrm{MWh}]$
r	Weighted average cost of capital, $[-]$ or $[\%]$
T_y	Number of hours per year, i.e., $8765.812\,77\,\mathrm{h}$
v	Value factor or capture rate, $[-]$ or $[\%]$
x	Learning rate, $[-]$ or $[\%]$

Manuscript received April 1, 2024. This work was supported by the strategic NERES research project. (Corresponding author: *Jonas Kristiansen Nøland*).

Jonas Kristiansen Nøland, Martin N. Hjelmeland, and Magnus Korpås are with the Department of Electric Energy, Norwegian University of Science and Technology (NTNU), Trondheim, Norway (e-mail: jonas.k.noland@ntnu.no; martin.hjelmeland@ntnu.no; magnus.korpas@ntnu.no).

Christian Hartmann is with the Department of Applied Physical Sciences, Institute for Energy Technology (IFE), Halden, Norway (e-mail: christian.hartmann@ife.no).

Lina Bertling Tjernberg is with the Division of Electric Power and Energy Systems, KTH Royal Institute of Technology, Stockholm, Sweden (e-mail: linab@kth.se).

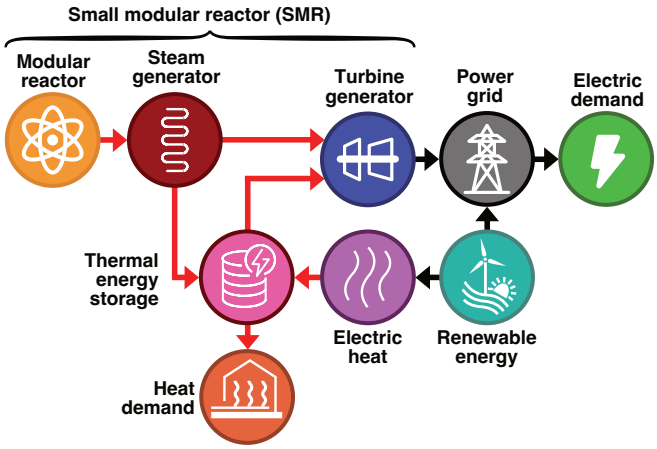

Fig. 1. Overview of an SMR integrated into a sustainable energy system.

I. Introduction

NUCLEAR energy offers a viable solution to addressing climate change and the escalating energy needs. Achieving the Paris Agreement's ambitious goal to keep global warming below $1.5\,^{\circ}\mathrm{C}$ requires swift action to cut greenhouse gas emissions, a challenge nuclear energy has a large potential to address. The International Energy Agency (IEA) emphasizes the crucial role of nuclear energy in attaining a net-zero carbon future [1], [2]. Similarly, the MIT Energy Initiative highlights the increased costs associated with deep decarbonization targets in the absence of nuclear energy [3]. Moreover, the effective use of nuclear energy in reducing carbon emissions is well-documented, with France and Sweden's power systems serving as prime examples of how rapid decarbonization was achieved [4]. History tells us that nuclear energy not only offers a long-term approach to combating climate change but also has a proven track record of success.

Small modular reactors (SMRs) represent a paradigm shift in nuclear technology, offering a smaller, approximately $300\,\mathrm{MW}$ capacity alternative to traditional gigawatt-scale reactors [5], [6]. These reactors stand out due to their modular, prefabricated designs that promise to lower construction costs and reduce project risks and capital expenses, which have historically been significant barriers to nuclear power expansion. Unlike their predecessors, SMRs aim to benefit from economies of mass production over economies of scale [7]. Contrary to existing nuclear technologies, SMRs could be suitable for both grid-connected applications in a decentralized

TABLE I
MEAN PERFORMANCE METRICS AND DESCRIPTIONS OF THE DIFFERENT TYPES OF SMR TECHNOLOGIES INVESTIGATED IN THIS PAPER

	SMR model	Inlet temp.	Outlet temp.	Thermal power	Electrical power	Electrical efficiency	Number of designs	Brief description	Ref.
G–III+	BWR	186 °C	286 °C	540 MW	174 MW	30.2 %	4	Reactor core turns light-water directly into steam	[17]
	PWR	276 °C	317 °C	370 MW	112 MW	26.1 %	9	Reactor heats up pressurized water & exchange heat	[18]
	iPWR	287 °C	321 °C	454 MW	149 MW	31.3 %	14	PWR's primary circuit integrated within reactor vessel	[18]
G–IV	HTGR	406 °C	832 °C	246 MW	106 MW	40.7 %	17	Gas-cooled reactor core at very high temperatures	[19]
	LMFR	374 °C	517 °C	335 MW	141 MW	38.0 %	9	Fast-neuron fission reactor with liquid metal coolant	[20]
	MSR	585 °C	702 °C	380 MW	159 MW	41.7 %	14	Coolant and/or the fission fuel is a molten salt mixture	[21]

microgrids [8], [9] and off-grid applications [10], [11]. Their compact, modular nature facilitates easier transportation and assembly, and their design allows for a broad range of applications beyond electricity generation, including district heating and water desalination. Furthermore, SMRs can complement intermittent renewables in an integrated and low-carbon energy system [12], as highlighted in Fig. 1, thereby supporting broader environmental objectives. Nevertheless, commercial deployments of SMRs are lagging, despite expectations that light-water-based SMRs will have a short path to market [13].

Regarding the perceived SMR-hype, Ramana (2015 & 2021) points out the fact that SMR-sized nuclear reactors have existed for half a century already and are, in principle, not something completely new [14], [15]. It is, therefore, important to note that while small light-water reactors are a well-established technology, the envisaged series fabrication, advanced manufacturing techniques such as local electron-beam welding [16], and modular construction of SMRs make them more relevant today than several decades ago.

This paper offers a comprehensive review of SMRs intended for power generation purposes and evaluates their potential role in the energy transition from both technical and economic perspectives. Electricity generation from renewable energy sources (RES), such as wind and solar, is weather-dependent and intermittent. Predicting the availability and variability of these resources far into the future poses a challenge, which is their most obvious and common limitation. To overcome these challenges, diversifying the electricity generation portfolio to include non-intermittent, firm, dispatchable sources like SMRs, or pairing them with energy storage solutions, is crucial. This paper addresses the most important power system integration aspects of SMRs but provides only limited details to accommodate readers not familiar with all the technicalities of nuclear power plants. Finally, we will evaluate the economic competitiveness of SMRs to take a potential role in the future energy system.

The present paper is organised as follows. A state-of-the-art (SotA) technology review of SMRs are provided in Section II. Moreover, Section III explores SMRs' potential roles in an integrated and low-carbon energy system, including both baseload operation and dispatchable modes. Then, the benefits of increasing the power market value of SMRs via thermal heat storage are described in Section IV. To evaluate the cost of SMRs in future deployments, Section V presents a basic techno-economic analysis of some SMR designs currently participating in the race toward commercialization. Finally, the paper is concluded in Section VI.

II. STATE-OF-THE-ART REVIEW

A. Literature Review

Recent research on SMR applications has focused on developing dynamic models for power system stability studies [23]–[25] and hybrid energy systems integration [26]. Other research topics include the energy management of SMRs to host increased penetration of renewables in integrated energy systems [27], [28]. Particularly interesting are SMRs' load-following possibilities and their potential to be integrated with intermittent renewables, which were investigated by Ingersoll *et al.* (2015) [29]. However, Locatelli *et al.* (2015) found that load-following operation of conventional SMRs can only be economically feasible if they are combined with co-generation applications, such as water desalinisation plants [30]. Locatelli *et al.* (2017 & 2018) also considered district heating and hydrogen production as other feasible co-generation applications [31], [32]. In addition to co-generation, it has been found by Bertoni *et al.* (2024) that SMRs used for direct air carbon capture (DACC) applications can significantly increase their usable energy from 32 % to up to 85 % [33], considerably enhancing the utilization thermal energy. A techno-economic SMR analysis by Slavin *et al.* (2024) projects DACC levelized cost by 2050 to be \$40 per ton CO_2 [34].

Sainati, Locatelli, and Brookes (2015) emphasise that a sufficient number of SMRs need to be deployed to compensate for their inherent lack of economies of scale [35]. Moreover, Mignacca and Locatelli (2020) identified that there are some uncertainties in the economics of SMRs, especially regarding the cost-benefit of modular construction and the operating and decommissioning costs of SMRs [36]. While there are uncertainties, Black *et al.* (2019) sees cost-reduction opportunities for SMRs based on detailed cost data that can make them economically competitive [37]. Similarly, Asuega *et al.* (2023) show that advanced modular reactors can be as economically viable as conventional ones [38]. In addition to cost uncertainties, licensing, legal, and regulatory processes are other major deployment challenges for SMRs, according to Hidayatullah *et al.* (2015) [39].

B. Technology Review

All of the basic nuclear reactor technologies considered in this paper are depicted in Fig. 2, highlighting their inherent differences in generating steam. All SMR technologies supply steam to a steam turbine that drives a synchronous turbogenerator to generate electrical power. Table I presents a group review of 70 SMRs that are currently developed to be deployed

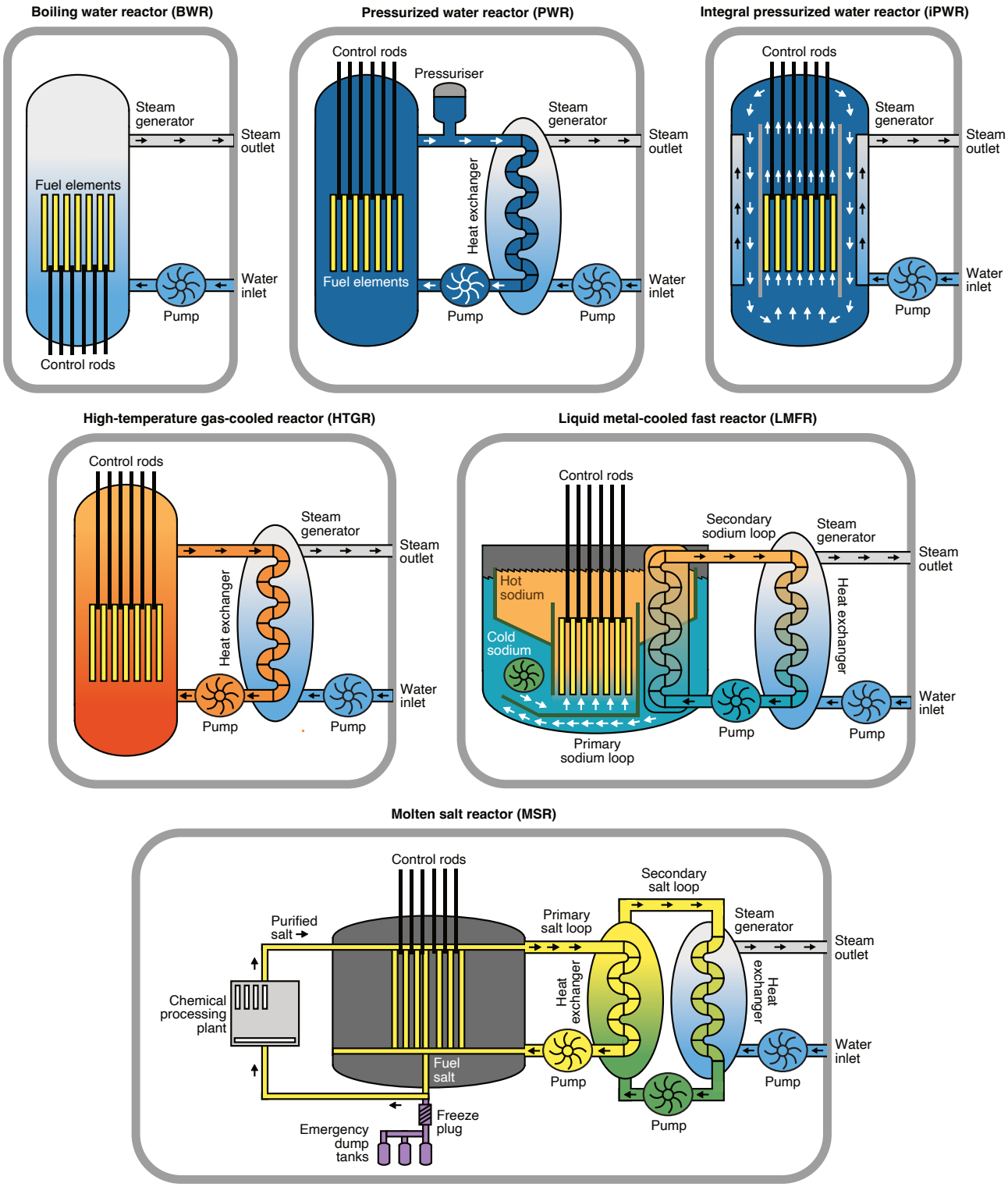

Fig. 2. Comparison of steam generation principles applied to conventional and next-generation small modular reactor (SMR) technologies.

for electrical power generation purposes, where the key metrics of all SMRs are listed in Table II. The SMR review includes the following categories: 4x boiling water reactors (BWRs); 9x pressurized water reactors (PWRs); 14x integral PWRs (iPWRs); 17x high-temperature gas-cooled reactors (HTGRs); 9x liquid metal-cooled fast reactors (LMFRs); 14x molten salt reactors (MSRs); 3x reactors do not match the main categories.

While the BWRs, PWRs, and iPWRs are considered conventional reactor technologies (Generation III+), HTGRs, LMFRs, and MSRs are based on next-generation nuclear technologies (Generation IV). Table I indicates that the mean electrical power of the SMR designs from all categories is in the range between 100 MW and 200 MW. Nevertheless, it is shown that Generation IV technologies (i.e., HTGR, LMFR,

TABLE II
OVERVIEW OF SMRS FOR ELECTRICAL POWER GENERATION UNDER DEVELOPMENT, UNDER CONSTRUCTION OR IN OPERATION [22]

	Supplier	Model	Reactor inlet temperature	Reactor outlet temperature	Thermal power	Electrical power	Electrical efficiency	Country	Design Status
BWR	NIKIET	KARAT-45	180 °C	286 °C	180 MW	45 MW	25.0 %	Russia	Conceptual
	NIKIET	KARAT-100	104 °C	286 °C	360 MW	100 MW	27.8 %	Russia	Conceptual
	NIKIET	VK-300	190 °C	285 °C	750 MW	250 MW	33.3 %	Russia	Detailed
	GE-Hitachi	BWRX-300	270 °C	288 °C	870 MW	300 MW	34.5 %	US/Japan	Detailed
PWR	NIKIET	UNITHERM	249 °C	330 °C	30 MW	6.6 MW	22.0 %	Russia	Conceptual
	Rosatom	ABV-6E	250 °C	325 °C	38 MW	9 MW	23.7 %	Russia	Final
	Last Energy	PWR-20	286 °C	312 °C	80 MW	20 MW	25.0 %	US	Detailed
	Rosatom	KLT-40S	280 °C	316 °C	150 MW	35 MW	23.3 %	Russia	Operational
	CGNPC	ACPR50S	299 °C	322 °C	200 MW	50 MW	25.0 %	China	Detailed
	KEPCO	BANDI-60	290 °C	325 °C	290 MW	60 MW	20.7 %	South Korea	Conceptual
	Holtec	SMR-160	243 °C	288 °C	525 MW	160 MW	30.5 %	US	Preliminary
	SPIC/SNERDI	CAP200	289 °C	313 °C	660 MW	200 MW	30.3 %	China	Basic
	Rolls-Royce	SMR	295 °C	325 °C	1358 MW	470 MW	34.6 %	UK	Detailed
iPWR	NIKIET	SHELF-M	271 °C	308 °C	35 MW	10 MW	28.6 %	Russia	Basic
	CNEA	CAREM-25	284 °C	326 °C	100 MW	27 MW	27.0 %	Argentina	Construction
	Rosatom	RITM-200M	282 °C	318 °C	175 MW	50 MW	28.6 %	Russia	Conceptual
	Rosatom	RITM-200N	283 °C	321 °C	190 MW	55 MW	28.9 %	Russia	Detailed
	NuScale	VOYGR	249 °C	316 °C	250 MW	77 MW	30.8 %	US	Licensing
	KAERI	SMART	296 °C	322 °C	365 MW	107 MW	29.3 %	South Korea	Detailed
	CNNC/NPIC	ACP100	287 °C	320 °C	385 MW	125 MW	32.5 %	China	Construction
	CNNC	ACP100S	287 °C	320 °C	385 MW	125 MW	32.5 %	China	Preliminary
	EDF	NUWARD	280 °C	307 °C	540 MW	170 MW	31.5 %	France	Conceptual
	KHNP/KAERI	i-SMR	296 °C	321 °C	540 MW	170 MW	31.5 %	South Korea	Basic
	BWXT	mPower	291 °C	319 °C	575 MW	195 MW	33.9 %	US	Terminated
	Westinghouse	AP300	294 °C	324 °C	900 MW	300 MW	33.3 %	France	Conceptual
	Rosatom	VBER-300	292 °C	328 °C	917 MW	325 MW	35.4 %	Russia	Licensing
	Mitsubishi	IMR	329 °C	345 °C	1000 MW	350 MW	35.0 %	Japan	Conceptual
HTGR	INET	HTR-10	250 °C	700 °C	10 MW	2.5 MW	25.0 %	China	Operational
	STL Nuclear	AMR	450 °C	750 °C	10 MW	3 MW	30.0 %	South Africa	Conceptual
	Urenco	U-Battery	n/a	n/a	10 MW	4 MW	40.0 %	UK	Conceptual
	HolosGen	HOLOS-QUAD	590 °C	855 °C	22 MW	10 MW	45.5 %	US	Detailed
	BRIN	PeLUIt/RDE	250 °C	750 °C	40 MW	13 MW	32.5 %	Indonesia	Conceptual
	STL Nuclear	HTMR100	250 °C	750 °C	100 MW	35 MW	35.0 %	South Africa	Basic
	General Atomics	FMR	509 °C	800 °C	100 MW	50 MW	50.0 %	US	Conceptual
	Eskom Holdings	AHTR-100	406 °C	1200 °C	100 MW	50 MW	50.0 %	South Africa	Conceptual
	StarCore	STARCORE	280 °C	750 °C	150 MW	60 MW	40.0 %	Canada	Conceptual
	X-energy	Xe-100	260 °C	750 °C	200 MW	82.5 MW	41.3 %	US	Basic
	Rosatom	MHR-100	553 °C	950 °C	215 MW	87 MW	40.5 %	Russia	Conceptual
	PBMR	PBMR-400	500 °C	900 °C	400 MW	165 MW	41.3 %	South Africa	Terminated
	Rosatom	MHR-T	578 °C	950 °C	600 MW	206 MW	34.3 %	Russia	Conceptual
	INET	HTR-PM	250 °C	750 °C	500 MW	210 MW	42.0 %	China	Operational
	General Atomics	EM^2	550 °C	850 °C	500 MW	265 MW	53.0 %	US	Conceptual
	Framatome	SC-HTGR	325 °C	750 °C	625 MW	272 MW	43.5 %	US	Preliminary
	Rosatom	GT-MHR	490 °C	850 °C	600 MW	288 MW	48.0 %	Russia	Preliminary
LMFR	Toshiba	4S	355 °C	510 °C	30 MW	10 MW	33.3 %	Japan	Detailed
	UNIST	MicroURANUS	250 °C	350 °C	60 MW	20 MW	33.3 %	South Korea	Conceptual
	Newcleo	LFR-TL-30	420 °C	530 °C	90 MW	30 MW	33.3 %	UK	Conceptual
	LeadCold	SEALER-55	420 °C	550 °C	140 MW	55 MW	39.3 %	Sweden	Conceptual
	ARC Clean Energy	ARC-100	355 °C	510 °C	286 MW	100 MW	35.0 %	Canada	Preliminary
	JSC AKME	SVBR	340 °C	485 °C	280 MW	100 MW	35.7 %	Russia	Detailed
	Newcleo	LFR-AS-200	420 °C	530 °C	480 MW	200 MW	41.7 %	Italy	Conceptual
	NIKIET	BREST-OD-300	420 °C	535 °C	700 MW	300 MW	42.9 %	Russia	Construction
	Westinghouse	LFR	390 °C	650 °C	950 MW	450 MW	47.4 %	US	Conceptual
MSR	Toshiba	MoveluX	450 °C	680 °C	10 MW	4 MW	40.0 %	Japan	Conceptual
	Centrum Výzkumu	Energy Well	650 °C	700 °C	20 MW	8 MW	40.0 %	Czech Republic	Conceptual
	Moltex Energy	SSR-U	725 °C	795 °C	40 MW	16 MW	40.0 %	UK	Basic
	Seaborg	CMSR	600 °C	670 °C	250 MW	100 MW	40.0 %	Denmark	Conceptual
	Thorizon	TMSR	500 °C	800 °C	250 MW	100 MW	40.0 %	Netherlands	Conceptual
	UC Berkeley	Mk1 PB-FHR	600 °C	700 °C	236 MW	100 MW	42.4 %	US	Conceptual
	Kairos Power	KP-FHR	550 °C	650 °C	320 MW	140 MW	43.8 %	US	Conceptual
	CAS/SINAP	smTMSR-400	650 °C	700 °C	400 MW	168 MW	42.0 %	China	Conceptual
	Terrestrial Energy	IMSR400	620 °C	700 °C	440 MW	195 MW	44.3 %	Canada	Detailed
	ITMSF	FUJI	565 °C	704 °C	450 MW	200 MW	44.4 %	Japan	Preliminary
	Flibe Energy	LFTR	500 °C	650 °C	600 MW	250 MW	41.7 %	US	Conceptual
	ThorCon Int.	ThorCon	560 °C	704 °C	557 MW	250 MW	44.9 %	US/Indonesia	Preliminary
	Moltex Energy	SSR-W	575 °C	625 °C	750 MW	300 MW	40.0 %	Canada	Conceptual
	Elysium Industries	MCSFR	650 °C	750 °C	1000 MW	400 MW	40.0 %	US	Conceptual
Other	Westinghouse	eVinci	n/a	800 °C	13 MW	5 MW	38.5 %	US	Conceptual
	Star Energy	STAR	270 °C	300 °C	30 MW	10 MW	33.3 %	Switzerland	Basic
	Candu Energy	CANDU SMR	n/a	310 °C	960 MW	300 MW	31.3 %	Canada	Conceptual

and MSR) have significantly higher reactor outlet temperatures and electrical efficiencies than conventional Generation III+ technologies (i.e., BWR, PWR, and iPWR). While Table II shows some performance variations within each category, the characteristics and performance of each SMR clearly show that each technology is distinguishable from a technical point of view. Within each category, it is also apparent that there are some gains in electrical efficiency for larger SMR designs. The only exception is for molten salt reactors (MSRs), where this trend is not so evident in the reported design specifications. Another non-consistent aspect is the difference between inlet and outlet reactors temperatures among SMR designs, where a smaller temperature gradient needs more mass flow through the reactor to exchange the same thermal energy.

Among the 70 SMRs reported in Table II, only three designs are operational, and only three are currently under construction for the first deployment. Most designs are either conceptual, preliminary, basic, or detailed, while two SMR concepts have been terminated. The number of SMR concepts and their wide variation in size and technical solutions could enhance the chance of at least some solutions to be successful. However, in order to capitalize on learning effects, it is important that each design is deployed in sufficient volumes. Currently, a wide array of SMR designs exist, yet it can be expected that only a subset will achieve commercial success. The analytics firm Rystad Energy has argued that there should not be more than 10 SMRs in the final stage of the SMR race to ensure sufficient learning of each technology [40]. This challenge could be argued through a thought experiment. 100 deployments of 10 designs with an average power output of 150 MW means a global capacity of 150 GW or 1250 TWh in annual output. Already, the SMR pipline is 22 GW [41], which would bring 183 TWh in new annual generation. In comparison, the global nuclear fleet generated 2682 TWh of electricity in 2022 [42].

III. Power System Integration

A major benefit of SMRs is their reduced size and division into smaller power modules. As a result, more redundancy is achieved, and a higher power output can be guaranteed, e.g., under maintenance periods. Fig. 3 schematically illustrates the configuration of a multi-SMR power generation site. Their maintenance and refueling schemes can be scheduled at different intervals to maximize baseload supply provision. Fig. 4 shows how multiple units effectively improve the baseload power duration curve. Three SMR modules will, as an illustrative example, provide a minimum power output of 67 %. They will provide 100 % power output 85 % of the time if each SMR module has an availability factor of 95 %.

In addition to baseload provision, SMRs are designed to operate in load-following mode. Table III lists the availability factor, dispatch range, and ramping capability of a selection of SMRs under development. Conventional load-following is based on curtailing the reactor output, which reduces SMR productivity. Due to low variable operating costs, there is limited economic value in holding back production. However, this flexibility can be delivered as a service into the balancing power market to make sure curtailed production is compensated with sufficient revenues. Moreover, combining SMRs with co-generation applications is another alternative to improve the economics, e.g., hydrogen production [43].

Another aspect of power system integration is the interfacing with the power grid through a synchronous turbogenerator, which is commonly used for nuclear power generation. Table IV highlights the performance characteristics of such

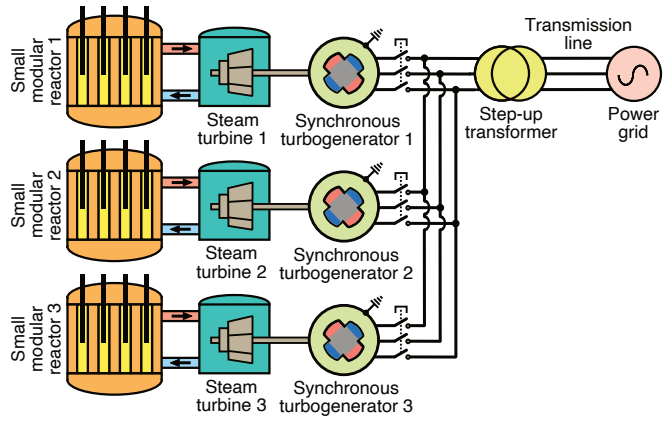

Fig. 3. Schematic illustration of a multi-SMR power generation site site with power redundancy and self-sufficient baseload provision to the power grid.

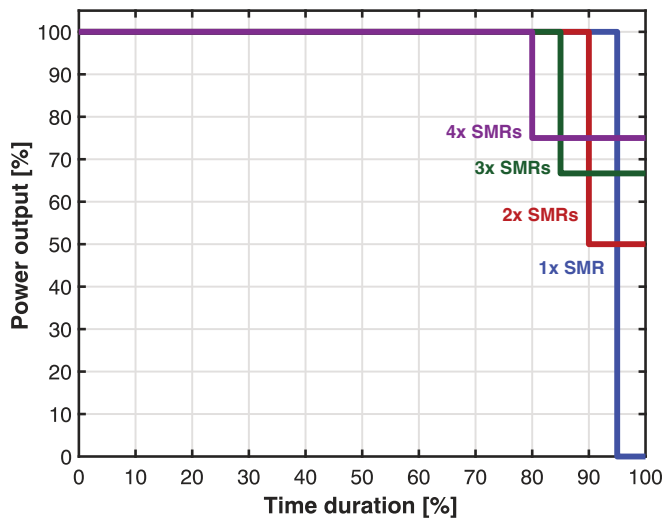

Fig. 4. Stylized illustration of the maximum baseload power duration curve for a power generation site as a function of the number of SMRs providing firm power output. The curves assume that the availability factor of each SMR is 95 % and that no more than one SMR is under maintenance simultaneously.

TABLE III
Flexibility services offered by SMRs based on conventional nuclear reactor technologies [22]

SMR concept	Availability factor	Dispatch range	Ramping capability
GE-Hitachi BWRX-300	$\geq$ 95 %	50–100 %	$\pm$ 0.5 %/min
NuScale VOYGR	$\geq$ 95 %	20–100 %	$\pm$ 0.8 %/min
Candu Energy SMR	$\geq$ 94 %	60–100 %	$\pm$ 1 %/min
Rolls-Royce SMR	$\geq$ 95 %	50–100 %	$\pm$ 3–5 %/min
EDF NUWARD	$\geq$ 90 %	20–100 %	$\pm$ 5 %/min
KHNP/KAERI i-SMR	$\geq$ 95 %	20–100 %	$\pm$ 5 %/min
Mitsubishi IMR	$\geq$ 97 %	0–100 %	$\pm$ 5 %/min
Rosatom ABV-6E	n/a	20–100 %	$\pm$ 6 %/min

TABLE IV
EXAMPLES OF AVAILABLE SYNCHRONOUS TURBOGENERATORS FROM TWO SUPPLIERS SUITABLE TO BE INTEGRATED INTO SMRS

	Generator type	Terminal voltage	Electrical frequency	Pole number	Mechanical speed	Apparent power	Power factor	Active power	Electrical efficiency	Ref.
Siemens	SGen5-100A	6.3–15.75 kV	50 Hz	2	3000 rpm	25–180 MVA	0.80	20–144 MW	$\leq$ 98.5 %	[44]
	SGen6-100A	6.3–15.75 kV	60 Hz	2	3600 rpm	25–180 MVA	0.85	21–153 MW	$\leq$ 98.5 %	[44]
	SGen5-1000A	10.5–20.0 kV	50 Hz	2	3000 rpm	180–370 MVA	0.80	144–296 MW	$\leq$ 98.9 %	[44]
	SGen6-1000A	10.5–20.0 kV	60 Hz	2	3600 rpm	180–370 MVA	0.85	153–315 MW	$\leq$ 98.9 %	[44]
	SGen5-2000P	$\leq$ 20.0 kV	50 Hz	2	3000 rpm	370–545 MVA	0.80	296–436 MW	$\leq$ 99.0 %	[45]
	SGen6-2000P	$\leq$ 20.0 kV	60 Hz	2	3600 rpm	370–560 MVA	0.85	315–476 MW	$\leq$ 99.0 %	[45]
GE	GEN-A-50	$\leq$ 21.0 kV	50 Hz	2	3000 rpm	$\leq$ 408 MVA	0.80	$\leq$ 326 MW	$\leq$ 98.9 %	[46]
	GEN-A-60	$\leq$ 19.0 kV	60 Hz	2	3600 rpm	$\leq$ 360 MVA	0.85	$\leq$ 306 MW	$\leq$ 98.8 %	[46]
	GEN-H-50	$\leq$ 23.0 kV	50 Hz	2	3000 rpm	$\leq$ 755 MVA	0.80	$\leq$ 604 MW	$\leq$ 99.0 %	[47]
	GEN-H-60	$\leq$ 26.0 kV	60 Hz	2	3600 rpm	$\leq$ 712 MVA	0.85	$\leq$ 605 MW	$\leq$ 99.0 %	[47]
	GEN-W-50	$\leq$ 22.0 kV	50 Hz	2	3000 rpm	$\leq$ 1020 MVA	0.85	$\leq$ 867 MW	$\leq$ 99.1 %	[48]
	GEN-W-60	$\leq$ 25.0 kV	60 Hz	2	3600 rpm	$\leq$ 875 MVA	0.85	$\leq$ 744 MW	$\leq$ 99.0 %	[48]

apparatus suitable for different SMR power levels. The table shows that the two-pole turbogenerator is most common with a mechanical speed of either 3000 rpm or 3600 rpm depending on whether the power grid is operating under 50 Hz or 60 Hz electrical frequency. The active and reactive power capacity is higher for 50-Hz turbogenerators, while the terminal voltage is slightly lower. Depending on the power level, typical turbogenerators have a relatively high efficiency between 98.5 % and 99.1 %. The major inefficiency lies in the steam turbine between the SMR reactor core and the front-end turbogenerator. The terminal voltage levels can vary between 6 kV and 25 kV. As a result, a step-up transformer is required to integrate SMRs into the transmission grid's voltage levels, depending on the point of connection.

IV. ENHANCED FLEXIBILITY WITH HEAT STORAGE

While conventionally configured reactors can provide essential power grid flexibility [49], the flexibility of future nuclear power stations can be enhanced by thermal heat storage [50]–[52]. Fig. 5 illustrates the physical principle of nuclear energy with thermal storage tanks. In this case, the SMR can add heat to the thermal battery when the power grid has surplus energy and the electricity prices are low.

A. Technical Performance

The turbine-generator is designed with a higher power capacity to deliver more electricity during periods of energy droughts and high prices to create higher value for the power grid. However, the reactor can have a very high capacity factor even though the SMR is not always generating electricity. SMRs with heat storage can have different configurations.

Figs. 5 and 6 show different configurations where one topology installs a large steam turbine and turbogenerator while the other topology has a baseload turbine-generator to provide firm electricity and another peaker turbine-generator to discharge the thermal battery during periods of extra power demand. To highlight some potential designs, Table V lists the maximum peaking capacity and duration for three different SMR concepts with thermal storage. While Moltex SSR-W is designed to provide 300 MW baseload power, it is designed to provide a maximum power output of 900 MW for 8 hours. However, the same concept is claimed to be able to provide

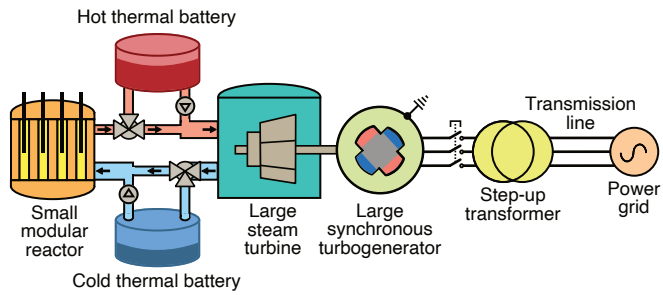

Fig. 5. Schematic illustration of a flexible small modular reactor with heat storage decoupling the reactor and the power output.

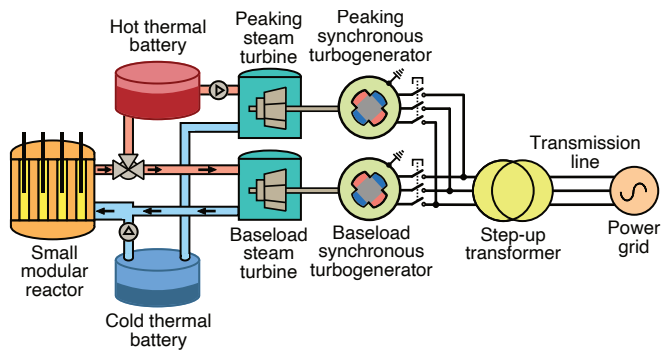

Fig. 6. Schematic illustration of a flexible small modular reactor with heat storage decoupling the reactor with two separate turbine-generators.

600 MW for 12 hours [53]. The overdimensioning of the turbine-generator system will add extra cost, but it can be compensated by increased generation in periods with higher electricity prices. Such a system has already been shown to successfully increase the value of concentrated solar energy [54].

B. Economic Value

The economic value of flexible nuclear energy can be evaluated using the value factor (v) or the capture rate of a nuclear power plant. It is defined as the ratio of the captured electricity price (p) to the base price (p_b), e.g., the average price over a year, expressed in eq. (1).

$$v = \frac{p}{p_b} \tag{1}$$

TABLE V
NEXT-GENERATION ADVANCED REACTOR DESIGNS WITH PEAKING CAPACITY USING THERMAL ENERGY STORAGE

	Moltex SSR-W	TerraPower Natrium™	Westinghouse LFR
Baseload power	300 MW	345 MW	450 MW
Peaking power	900 MW	500 MW	600 MW
Relative boosting(*)	3.00 x	1.45 x	1.33 x
Peaking duration	≤ 8.0 h	≤ 5.5 h	n/a
Thermal storage	4800 MWh	852.5 MWh	n/a

(*) Ratio between peaking power and baseload power.

TABLE VI
THEORETICAL APPROXIMATION OF AN SMR'S VALUE FACTOR AS A FUNCTION OF THE TURBINE-GENERATOR'S BASELOAD CAPACITY FACTOR

K	v
95 %	1.05
90 %	1.11
85 %	1.18
80 %	1.25

Uses approximation, $v \approx \frac{1}{K}$, for eq. (1).

Ideally, the maintenance of nuclear power plants should be planned for periods of the year when the electricity price is expected to be low, e.g., summer time. Consider that the downtime matches perfectly with periods of either low prices, zero prices, or negative prices. Also, consider that other periods of near-zero prices can be handled by internal thermal storage to maximize the value and utilization of the reactor. Thus, a theoretical (ideal) value factor for flexible nuclear power can be estimated as $v \approx \frac{1}{K}$), which approximates eq. (1). With thermal storage, the capacity factor of the nuclear reactor itself can be kept equal to its availability, while the capacity factor (K) of the turbine-generator – scaled by its baseload power – will be lower due to its overcapacity. Table VI estimates potential value factors based on the ideal approximation, which assumes near-zero electricity price when the reactor does not produce electricity. The net present value (NPV) of the additional value factor needs to be equal to or exceed the additional overnight cost of the thermal storage and peaking system (Δc), as expressed in eq. (2).

$$\Delta c \leq K T_y \sum_{i=0}^{N-1} \frac{\Delta v p_b}{(1+r)^i} \tag{2}$$

For illustrative purposes, consider the case that the old value factor was 1.1 (without thermal storage), and the new one becomes 1.4. Then, the improvement in the value factor (Δv) is 0.3 of the base price. With a base price of \$60/MWh, or 6 ¢/kWh, a thermal storage economic lifespan of 40 years, and an interest rate of 5 %, the cost of the thermal and peaking system should then not exceed \$2700/kW, according to eq. (2). The added overnight cost is scaled by the baseload capacity of the reactor and the reactor availability is assumed 95 %.

V. TECHNO-ECONOMIC EVALUATION

This section will provide some evaluations of the techno-economic competitiveness of SMRs.

TABLE VII
SCALING COEFFICIENT USED TO PREDICT ECONOMIES OF SCALE OF A COMPLETE NUCLEAR POWER PLANT

	k
NEA/OECD (2000) [57]	0.40–0.70
Carelli *et al.* (2010) [58]	0.50–0.70
Moore (2016) [59]	0.55
Rasmussen *et al.* (1996) [56]	0.60
Black *et al.* (2019) [37]	1.00

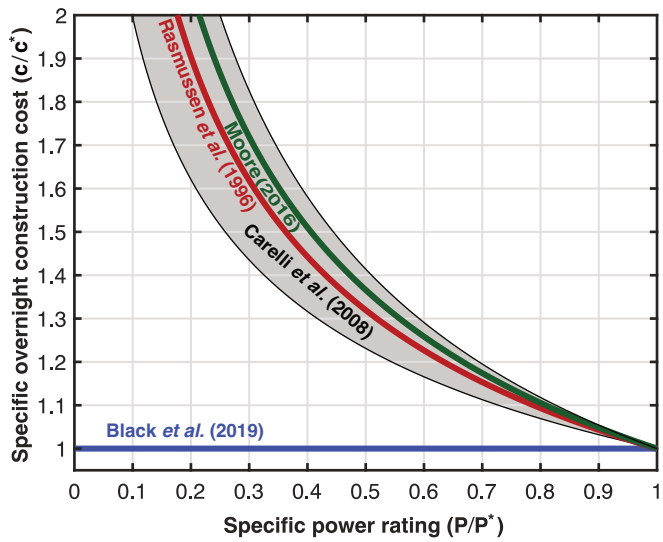

Fig. 7. Lack of economics of scale effect by reducing the power rating based on eq. (4) using different scaling factors in Table VII.

A. Economics of Scale

The most common economics of scale relationship for nuclear reactors has been described by Roulstone *et al.* (2020) according to eq. (3), where the cost of the reactor (C) is a function of its installed capacity (P), a scaling coefficient (k) and a reference reactor with cost (C^*) and rating (P^*) [55].

$$C = C^* \left(\frac{P}{P^*}\right)^k \tag{3}$$

Eq. (4) is a modified version obtained by normalizing the cost in eq. (3) by the ratings, where $c = C/P$ and $c^* = C^*/P^*$.

$$c = c^* \left(\frac{P}{P^*}\right)^{k-1} \tag{4}$$

The value of the scaling coefficient (k) can be between zero and unity, where the unity scaling ($k = 1$) factor implies that there is no economics of scale effects. On the contrary, a low value means that there is a large scaling effect. In the extreme case, zero scaling ($k = 0$) implies that the cost per unit is size-independent, where a large unit costs the same as a small one. The "rule of thumb" coefficient value is 0.6 [56]. Different reported values are listed and referenced in Table VII and used to estimate the lack of economics of scale effect in Fig. 7.

B. Economics of Mass Production

Wright's law is an applicable model that aims to estimate the learning effects described by eq. (5). It can apply to critical

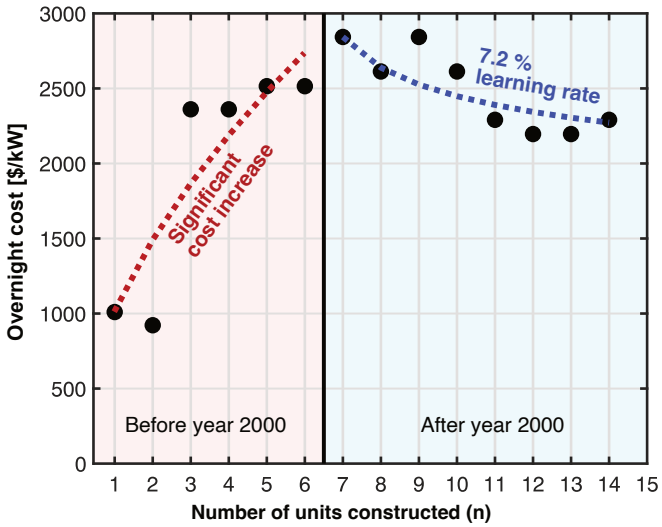

Fig. 8. Comparison of the learning effect predicted by eq. (5) against what the experienced cost reductions of non-series-produced, 202 MW, small nuclear reactors in India after year 2000. The overnight cost of each unit is provided in 2020 dollars and reported by Lovering *et al.* (2016) [60].

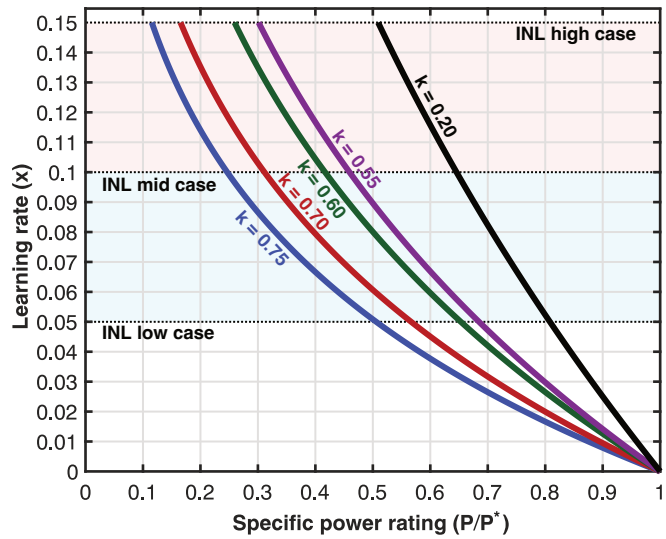

Fig. 9. The required learning rate needed for the 10th of a kind unit ($n = 10$) to cancel out the added cost from the lack of economics of scale using eq. (7) with different scaling factors according to Table VII.

TABLE VIII
EXPECTED SMALL MODULAR REACTOR LEARNING RATES TO PREDICT ECONOMIES OF MASS PRODUCTION

	x
Abou Jaoude *et al.* (2023) [61]	0.05–0.15
Roulstone *et al.* (2020) [62]	0.02–0.15
Lewis *et al.* (2016) [63]	0.05–0.10
Carelli *et al.* (2008) [64]	0.08

cost factors such as improved labor efficiency, standardization, modularization, and lessons learned, which are essential in the nuclear sector and the energy sector in general. The learning rate (x) in eq. (5) describes the reduction in cost per cumulative doubling of the number of units constructed. Wright's law is applied to the overnight construction cost of a collection of small nuclear reactors in India, where it does not fully describe the real data, as seen in Fig. 8, but can simply explain on-average cost reductions. I.e., experienced on-average learning in India for 202 MW nuclear reactors over the last decades is 7.2 % when matching the last unit and normalizing all costs in 2020 dollars. Nevertheless, we see that the learning curve does not fully match the actual costs of each reactor, where there are some over- and undershoots. These units were not series-produced, and the average construction time was 8.67 yr, which might not be beneficial if the objective is to maximize learning effects.

$$c = c^{*}(1-x)^{\frac{\ln(n)}{\ln(2)}} \tag{5}$$

Different reported learning rates are listed and referenced in Table VIII to be relevant for SMRs. Idaho National Laboratory predicts a 5 % low case ($x = 0.05$), a 10 % mid case ($x = 0.10$), and a 15 % high case ($x = 0.15$) for the learning [61].

An important measure of the economics of mass production is how many units are needed to compensate for the lack of economies of scale. It implies that the contributions from eqs. (4) and (5) cancel each other to unity, as shown in eq. (6).

$$\left(\frac{P}{P^{*}}\right)^{k-1}(1-x)^{\frac{\ln(n)}{\ln(2)}} = 1 \tag{6}$$

Eq. (7) is the solution of eq. (6) with respect to the learning rate needed for the cost reductions to even out the lack of economies of scale. Similarly, eq. (8) expresses the number of units needed to be constructed to reach the same objective.

$$x = 1 - \left(\frac{P}{P^{*}}\right)^{(1-k)\frac{\ln(2)}{\ln(n)}} \tag{7}$$

$$n = e^{\frac{(1-k)\ln(2)\ln\left(\frac{P}{P^{*}}\right)}{\ln(1-x)}} \tag{8}$$

Using eq. (7), Fig. 9 plots the learning rate needed to ensure that the 10th unit will compensate for the lack of economies of scale. It can be seen that a "0.6" standard scaling coefficient implies a learning rate of 13 % if the specific power rating is 30 % of the large-scale plant.

By applying eq. (8), Fig. 10 describes the number of constructed units needed to cancel the lack of economies of scale for four different PWR-type SMR sizes. A larger-size SMR like Rolls-Royce SMR needs a lower number of units constructed to become competitive.

The next step is to establish the number of units needed to reach a specific target cost. Eq. (9) expresses that the learning needed meets desired cost reductions and, at the same time, compensates for the lack of economies of scale. Similarly, eq. (10) expresses the same objective in terms of the number of units needed to be constructed.

$$\left(\frac{c}{c^{*}}\right)\left(\frac{P}{P^{*}}\right)^{1-k} = (1-x)^{\frac{\ln(n)}{\ln(2)}} \tag{9}$$

$$n = e^{\frac{\ln(2)}{\ln(1-x)}\left[\ln\left(\frac{c}{c^{*}}\right)+(1-k)\ln\left(\frac{P}{P^{*}}\right)\right]} \tag{10}$$

Similarly to Fig. 10, Fig. 11 presents the number of units needed to reach the SMR supplier's target overnight cost using

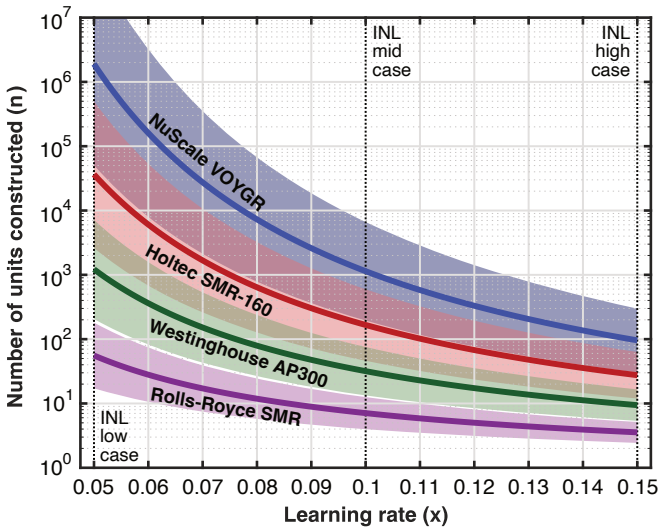

Fig. 10. Number of units needed to cancel the lack of economics of scale as a function of the learning rate with different SMRs. Calculations are made using eq. (8) with a standard scaling factor, $k = 0.6$, and a reference PWR power rating of $1117\,\mathrm{MW}$ (i.e., AP1000). Shaded areas represents the sensitivity of the scale factor in the range between $k = 0.5$ to $k = 0.7$.

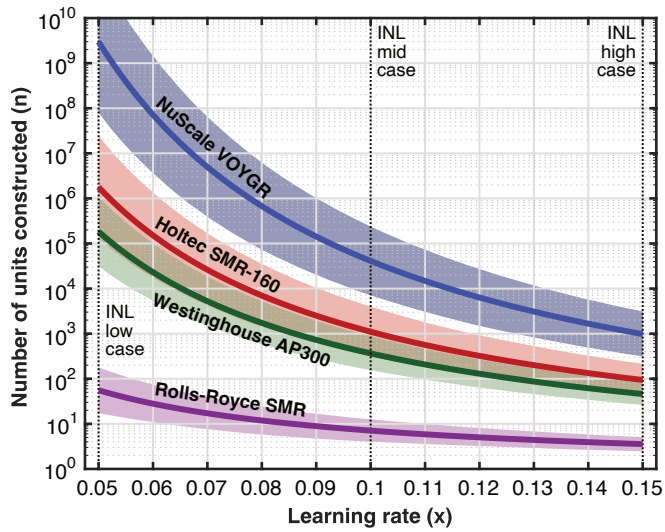

Fig. 11. Number of units needed to reach different SMR suppliers Nth-of-a-kind construction cost as a function of the learning rate. Calculations are made using eq. (10) with a standard scaling factor, $k = 0.6$, and a reference PWR power rating of $1117\,\mathrm{MW}$ (i.e., AP1000). Shaded areas represents the sensitivity of the scale factor in the range between $k = 0.5$ to $k = 0.7$.

eq. (10). Small SMR designs like NuScale VOYGR are seen to be very sensitive to the learning rate and the estimated economies of scale. This is as one can expect from economic theory: smaller SMR concepts need a higher learning rate to compete against larger units. This might also suggest that SMRs and large reactors are likely to cater to distinct market segments. I.e., high power demand for large reactors and low-to-medium power demand for SMRs. Nevertheless, smaller SMRs could have properties that make higher learning rates achievable. This is because the degree of modularization (DoM) is a key ingredient of the potential learning. Fig. 12 shows that the maximum achievable DoM increases for lower power ratings, which could benefit the expected learning. The DoM also describes the transportable weight fraction of modules, indicating that larger SMR designs like Rolls-Royce SMR with $470\,\mathrm{MW}$ power rating could be more difficult to transport and modularise.

Table IX presents worked examples for five different SMR concepts applying a moderate learning rate of $10\,\%$ which implicitly favors larger SMR designs. Their levelized cost of electricity (LCOE) is estimated according to eq. (11).

$$\mathrm{LCOE} = \frac{\gamma c}{\sum_{i=0}^{N-1} \frac{K T_y}{(1+r)^i}} + \mathrm{OPEX} \tag{11}$$

Based on our assumptions, we see that Westinghouse AP300 and Rolls-Royce SMR are the most competitive concepts. The example shows that A300 has a first-of-a-kind (FOAK) LCOE of \$87/MWh, and after 366 constructed units, the Nth-of-a-kind (NOAK) LCOE is reached with \$50/MWh in LCOE. Similarly, Rolls-Royce SMR needs only 8 units to reach their announced cost levels, where FOAK is expected at \$77/MWh, and the NOAK unit is expected to reach \$63/MWh. For simplification, all SMRs have an assumed OPEX of \$25/MWh, implying that their long-term LCOE will be \$25/MWh when the CAPEX is paid off. This is according to the Idaho National

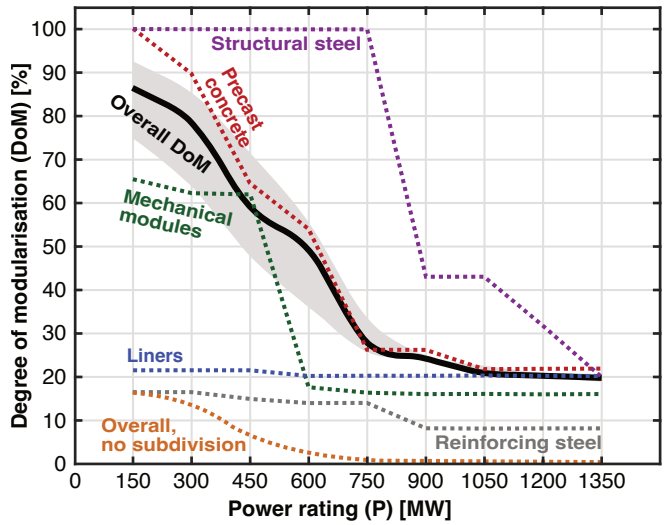

Fig. 12. Transportable weight fraction of modules, both overall and by module type, adopted from Lloyd *et al.* (2021) [66]. The grey area represents the maximum overall degree of modularisation (DoM) sensitivity to variation in scaling exponent (k) by one standard deviation.

Lab moderate cost case [61]. However, the cost of future lifetime extensions will slightly increase the long-term LCOE to approximately \$35/MWh, depending on interest rate [65].

Lastly, there are more investment risks associated with large power plants. If an AP1000, due to a relatively large investment, has a weighted average cost of capital (WACC) of $7.5\,\%$ and an $8\,\mathrm{yr}$ construction time, event the FOAK LCOE of AP300 SMR will be lower considering a $5\,\%$ WACC and a $8\,\mathrm{yr}$ construction time. It emphasizes that there is a lot of learning potential already on the financial side that could be assessed from the first unit of deployment. Nevertheless, this is also sensitive to the investment models chosen for SMRs.

TABLE IX
COST ESTIMATIONS OF FOUR DIFFERENT PWR-BASED SMRS APPLYING SCALING LAWS AND LEARNING RATES

	Symbol	NuScale VOYGR	Holtec SMR-160	Westinghouse AP300	Rolls-Royce SMR	
Reference reactor electrical power rating (AP1000)	P^*	1117	1117	1117	1117	MW
SMR electrical power rating per module	P	77	160	300	470	MW
SMR specific electrical power rating	P/P^*	0.069	0.143	0.269	0.421	–
SMR specific normalized overnight cost	c/c^*	2.915	2.176	1.692	1.414	–
Reference reactor normalized overnight cost [42]	c^*	5000	5000	5000	5000	$/kW
Estimated SMR norm. overnight cost (FOAK)	c	14 575	10 878	8459	7069	$/kW
Announced SMR norm. overnight cost (NOAK) [40]	c	2900	3750	3450	5250	$/kW
Estimated SMR overnight cost (FOAK)	C	1.122	1.740	2.538	3.322	B$
Announced SMR overnight cost (NOAK)	C	0.223	0.600	1.035	2.468	B$
Nth of a kind to cancel lack of economies of scale	n^*	1140	167	32	10	–
Nth of a kind to reach announced cost (NOAK)	n	41 025	1104	366	8	–
Capacity expansion to cancel lack of economies of scale	n^*P	87.78	26.72	9.60	4.70	GW
Capacity expansion to reach announced cost (NOAK)	nP	3158.92	176.64	109.80	3.76	GW
Estimated levelized cost of electricity (FOAK)	LCOE	131	104	87	77	$/MWh
Estimated levelized cost of electricity (NOAK)	LCOE	46	52	50	63	$/MWh

Assume $\$25\,\mathrm{MWh}^{-1}$ in OPEX [61], a capacity factor (K) of 95 %, a scaling coefficient (k) of 0.6, a learning rate (x) of 10 %, an interest rate (r) of 5 %, a total construction time of 4 years, and a design lifetime (N) of 60 years. Nth-of-a-kind (NOAK) announced overnight costs are taken from a recent report on nuclear energy by Rystad Energy [40] with exchange rate $1.08\,\$/€$. The reference reactor is AP1000 and based on 2022 overnight cost in the US [42].

VI. CONCLUSION AND OUTLOOK

This paper has presented an overview of small modular and advanced nuclear reactors and provided some insights into their potential role in the energy transition from both a technical and economic perspective. We have investigated 70 different SMR concepts intended for power generation purposes and divided them into six categories, where three belong to conventional Generation III+ light-water reactor technologies while the three others are considered Generation IV next-generation nuclear reactor technologies. SMRs have benefits as a complementary source in a deeply decarbonized power and energy system. Their ability to secure firm baseload power is especially to be important in the future electrification of heavy, non-flexible power consumers. Moreover, conventional SMRs can provide load-following services to the power grid. Integrated with thermal storage, the flexibility of SMRs can be enhanced and the value could be even higher. Nevertheless, there are some economic uncertainties regarding SMRs from an economic point of view where the achieved learning rate will be essential to ensure SMR's competitiveness as a key player in the energy transition. Nonetheless, the features of SMRs could make them a wildcard to penetrate new markets often neglected by large reactors, including the utilization of heat and remote off-grid applications.

ACKNOWLEDGMENTS

The authors would like to acknowledge the funding of the NERES-project (ntnu.edu/web/iel/neres), "Nuclear Energy's role in a Renewable Energy System", to support the effort needed to write this article.

REFERENCES

[1] "Nuclear Power and Secure Energy Transitions: From Today's Challenges to Tomorrow's Clean Energy Systems," *International Energy Agency (IEA)*, 2022. [Online]. Available: https://www.iea.org/reports/nuclear-power-and-secure-energy-transitions

[2] "Net Zero Roadmap: A Global Pathway to Keep the 1.5 °C Goal in Reach," *International Energy Agency (IEA)*, 2023. [Online]. Available: https://www.iea.org/reports/net-zero-roadmap-a-global-pathway-to-keep-the-15-0c-goal-in-reach

[3] D. Petti, P. J. Buongiorno, M. Corradini, and J. Parsons, "The Future of Nuclear Energy in a Carbon-Constrained World," *Massachusetts Institute of Technology Energy Initiative (MITEI)*, vol. 272, 2018.

[4] R. Freeman, S. Pye, V. Vinichenko, J. Jewell, J. Jacobsson, and A. Cherp, "Historical diffusion of nuclear, wind and solar power in different national contexts: implications for climate mitigation pathways," *Environ. Res. Lett.*, vol. 18, no. 9, p. 094066, Sep. 2023.

[5] J. Nøland, M. Hjelmeland, L. B. Tjernberg, and C. Hartmann, "The race to realize small modular reactors: Rapid deployment of clean dispatchable energy sources,," *IEEE Power Energy Mag.*, vol. 22, no. 3, pp. 2–14, 2024.

[6] Y. Wang, W. Chen, L. Zhang, X. Zhao, Y. Gao, and V. Dinavahi, "Small modular reactors: An overview of modeling, control, simulation, and applications," *IEEE Access*, pp. 1–23, 2024.

[7] "The NEA Small Modular Reactor Dashboard," 2023. [Online]. Available: https://www.oecd-nea.org/jcms/pl_78743/the-nea-small-modular-reactor-dashboard

[8] R. Abu Saleem, J. Kelly, T. Rousan, and P. W. Sauer, "Issues in the use of small modular reactors in microgrids," *IEEE Trans. Power Delivery*, vol. 35, no. 3, pp. 1230–1236, 2020.

[9] B. Poudel, T. R. McJunkin, N. Kang, J. T. Reilly, R. Guerrero, and M. Stadler, "Small reactors in microgrids: Technology modeling and selection," Idaho National Laboratory (INL), Idaho Falls, ID (United States), Tech. Rep., 2023.

[10] J. R. Lovering, "A techno-economic evaluation of microreactors for off-grid and microgrid applications," *Sustainable Cities Soc.*, vol. 95, p. 104620, 2023.

[11] M. Huang, X. Cui, N. Zhang, M. Jia, and Y. Wang, "Optimal planning of standalone net-zero energy systems with small modular reactors," *IEEE Trans. Smart Grid*, pp. 1–1, 2024.

[12] L. Duan, R. Petroski, L. Wood, and K. Caldeira, "Stylized least-cost analysis of flexible nuclear power in deeply decarbonized electricity systems considering wind and solar resources worldwide," *Nat. Energy*, vol. 7, no. 3, pp. 260–269, 2022.

[13] M. K. Rowinski, T. J. White, and J. Zhao, "Small and medium sized reactors (SMR): A review of technology," *Renewable Sustainable Energy Rev.*, vol. 44, pp. 643–656, Apr. 2015.

[14] M. Ramana, "The forgotten history of small nuclear reactors," *IEEE Spectr.*, vol. 52, no. 5, pp. 44–58, 2015.

[15] M. V. Ramana, "Small modular and advanced nuclear reactors: A reality check," *IEEE Access*, vol. 9, pp. 42 090–42 099, 2021.

[16] World Nuclear News (WNN), "British company pioneers new nuclear welding technique," https://www.world-nuclear-news.org/Articles/British-company-pioneers-new-nuclear-welding-techn, 2023, accessed: 2023-03-07.

[17] "BWRX-300, One of the most economical SMR designs available, *GE Hitachi Nuclear Energy*, 2021." [Online]. Available: https://www.gevernova.com/content/dam/gepower-nuclear/global/en_US/documents/product-fact-sheets/GE%20Hitachi%20BWRX-300%20Fact%20sheet.pdf

[18] P. Fernández-Arias, D. Vergara, and Á. Antón-Sancho, "Bibliometric review and technical summary of PWR small modular reactors," *Energies*, vol. 16, no. 13, p. 5168, 2023.

[19] S. Wu, X. Ma, J. Liu, J. Wan, P. Wang, and G. Su, "A load following control strategy for chinese modular high-temperature gas-cooled reactor HTR-PM," *Energy*, vol. 263, p. 125459, 2023.

[20] A. I. Orlov and B. A. Gabaraev, "Heavy liquid metal cooled fast reactors: peculiarities and development status of the major projects," *Nucl. Energy Technol.*, vol. 9, no. 1, pp. 1–18, 2023.

[21] B. Mignacca and G. Locatelli, "Economics and finance of molten salt reactors," *Prog. Nucl. Energy*, vol. 129, p. 103503, 2020.

[22] "Advances in Small Modular Reactor Technology Developments," *International Atomic Energy Agency (IAEA)*, 2022.

[23] B. Poudel, K. Joshi, and R. Gokaraju, "A dynamic model of small modular reactor based nuclear plant for power system studies," *IEEE Trans. Energy Convers.*, vol. 35, no. 2, pp. 977–985, 2020.

[24] W. Chen, V. Dinavahi, and N. Lin, "Detailed multi-domain modeling and faster-than-real-time hardware emulation of small modular reactor for EMT studies," *IEEE Trans. Energy Convers.*, pp. 1–14, 2024.

[25] A. Sabir, D. Michaelson, and J. Jiang, "Load-frequency control with multimodule small modular reactor configuration: Modeling and dynamic analysis," *IEEE Trans. Nucl. Sci.*, vol. 68, no. 7, pp. 1367–1380, 2021.

[26] B. Poudel and R. Gokaraju, "Small modular reactor (SMR) based hybrid energy system for electricity district heating," *IEEE Trans. Energy Convers.*, vol. 36, no. 4, pp. 2794–2802, 2021.

[27] ——, "Optimal operation of SMR-RES hybrid energy system for electricity district heating," *IEEE Trans. Energy Convers.*, vol. 36, no. 4, pp. 3146–3155, 2021.

[28] D. Michaelson and J. Jiang, "Integration of small modular reactors into renewable energy-based standalone microgrids: An energy management perspective," *IEEE Power Energy Mag.*, vol. 20, no. 2, pp. 57–63, 2022.

[29] D. Ingersoll, C. Colbert, Z. Houghton, R. Snuggerud, J. Gaston, and M. Empey, "Can nuclear power and renewables be friends?" in *Proc. ICAPP*, vol. 9, 2015.

[30] G. Locatelli, S. Boarin, F. Pellegrino, and M. E. Ricotti, "Load following with small modular reactors (SMR): A real options analysis," *Energy*, vol. 80, pp. 41–54, 2015.

[31] G. Locatelli, A. Fiordaliso, S. Boarin, and M. E. Ricotti, "Cogeneration: An option to facilitate load following in small modular reactors," *Prog. Nucl. Energy*, vol. 97, pp. 153–161, 2017.

[32] G. Locatelli, S. Boarin, A. Fiordaliso, and M. E. Ricotti, "Load following of small modular reactors (SMR) by cogeneration of hydrogen: A techno-economic analysis," *Energy*, vol. 148, pp. 494–505, 2018.

[33] L. Bertoni, S. Roussanaly, L. Riboldi, R. Anantharaman, and M. Gazzani, "Integrating direct air capture with small modular nuclear reactors: understanding performance, cost, and potential," *J. Phys.: Energy*, 2024.

[34] B. Slavin, R. Wang, D. Roy, J. Ling-Chin, and A. P. Roskilly, "Techno-economic analysis of direct air carbon capture and hydrogen production integrated with a small modular reactor," *Appl. Energy*, vol. 356, p. 122407, 2024.

[35] T. Sainati, G. Locatelli, and N. Brookes, "Small modular reactors: Licensing constraints and the way forward," *Energy*, vol. 82, pp. 1092–1095, 2015.

[36] B. Mignacca and G. Locatelli, "Economics and finance of small modular reactors: A systematic review and research agenda," *Renewable Sustainable Energy Rev.*, vol. 118, p. 109519, 2020.

[37] G. A. Black, F. Aydogan, and C. L. Koerner, "Economic viability of light water small modular nuclear reactors: General methodology and vendor data," *Renewable Sustainable Energy Rev.*, vol. 103, pp. 248–258, 2019.

[38] A. Asuega, B. J. Limb, and J. C. Quinn, "Techno-economic analysis of advanced small modular nuclear reactors," *Appl. Energy*, vol. 334, p. 120669, 2023.

[39] H. Hidayatullah, S. Susyadi, and M. H. Subki, "Design and technology development for small modular reactors–safety expectations, prospects and impediments of their deployment," *Prog. Nucl. Energy*, vol. 79, pp. 127–135, 2015.

[40] "Nuclear power in Norway (Kjernekraft i Norge), *Rystad Energy, Oslo, Norway*, nov. 2023." [Online]. Available: https://www.nho.no/contentassets/220ef13d98a3415abc745b7ec5e88939/20231121-kjernekraft-i-norge.pdf

[41] S. Flowers and D. Brown, "Nuclear's massive net zero growth opportunity," *WoodMackenzie*, 2024. [Online]. Available: https://www.woodmac.com/news/the-edge/nuclears-net-zero-growth-opportunity/

[42] "World Energy Outlook 2023," *International Energy Agency (IEA)*, Oct. 2023.

[43] IAEA, "Examining the Technoeconomics of Nuclear Hydrogen Production and Benchmark Analysis of the IAEA HEEP Software," 2018, iSBN: 978-92-0-109318-9.

[44] "SGen-100A/1000A generator series, *Siemens Energy*." [Online]. Available: https://www.siemens-energy.com/global/en/home/products-services/product/sgen-100a.html#SGen-100A-2P-series-tab-5

[45] "SGen-2000P Generator Series, *Siemens Energy*." [Online]. Available: https://www.siemens-energy.com/global/en/home/products-services/product/sgen-2000p.html

[46] "Air-Cooled Generator (GEN-A), *General Electric*." [Online]. Available: https://www.gevernova.com/gas-power/products/generators/air-cooled

[47] "Hydrogen-Cooled Generator (GEN-H), *General Electric*." [Online]. Available: https://www.gevernova.com/gas-power/products/generators/hydrogen-cooled

[48] "Water-Cooled Generator (GEN-W), *General Electric*." [Online]. Available: https://www.gevernova.com/gas-power/products/generators/water-cooled

[49] J. D. Jenkins, Z. Zhou, R. Ponciroli, R. B. Vilim, F. Ganda, F. de Sisternes, and A. Botterud, "The benefits of nuclear flexibility in power system operations with renewable energy," *Appl. Energy*, vol. 222, pp. 872–884, 2018.

[50] P. Denholm, J. C. King, C. F. Kutcher, and P. P. Wilson, "Decarbonizing the electric sector: Combining renewable and nuclear energy using thermal storage," *Energy Policy*, vol. 44, pp. 301–311, 2012.

[51] C. W. Forsberg, P. Sabharwall, and H. D. Gougar, "Heat storage coupled to generation IV reactors for variable electricity from base-load reactors: Workshop proceedings. changing markets, technology, nuclear-renewables integration and synergisms with solar thermal power systems," Idaho National Lab. (INL), Idaho Falls, US, Tech. Rep., 2019.

[52] M. Aunedi, A. A. Al Kindi, A. M. Pantaleo, C. N. Markides, and G. Strbac, "System-driven design of flexible nuclear power plant configurations with thermal energy storage," *Energy Convers. Manage.*, vol. 291, p. 117257, 2023.

[53] "Enables renewables, *Moltex Clean Energy*." [Online]. Available: https://www.moltexenergy.com/enables-renewables/

[54] U. Pelay, L. Luo, Y. Fan, D. Stitou, and M. Rood, "Thermal energy storage systems for concentrated solar power plants," *Renewable Sustainable Energy Rev.*, vol. 79, pp. 82–100, 2017.

[55] A. Roulstone, C. Lloyd, and R. Lyons, "Expanding nuclear's contribution to climate change with SMRs," *Nucl. Future*, vol. 16, no. 5, pp. 40–46, 2020.

[56] N. C. Rasmussen, T. A. Burke, G. R. Choppin, A. G. Croff, H. K. Forsen, B. J. Garrick, J. M. Googin, H. A. Grunder, L. C. Hebel, T. O. Hunder, M. S. Kazimi, E. E. Kintner, R. A. Langley, E. A. Mason, F. W. Mclafferty, T. H. Pigford, D. W. Reicher, J. E. Watson Jr., and S. D. Wiltshire, "Nuclear wastes: technologies for separations and transmutation, National Research Council," 1996.

[57] A. Yu, *Reduction of capital costs of nuclear power plants, NEA/OECD*. Organisation for Economic Co-operation and Development, 2000.

[58] M. D. Carelli, P. Garrone, G. Locatelli, M. Mancini, C. Mycoff, P. Trucco, and M. E. Ricotti, "Economic features of integral, modular, small-to-medium size reactors," *Prog. Nucl. Energy*, vol. 52, no. 4, pp. 403–414, 2010.

[59] M. Moore, "The economics of very small modular reactors in the north," Atomic Energy of Canada Limited, Tech. Rep., 2016.

[60] J. R. Lovering, A. Yip, and T. Nordhaus, "Historical construction costs of global nuclear power reactors," *Energy Policy*, vol. 91, pp. 371–382, 2016.

[61] A. Abou Jaoude, C. Bolisetti, L. Lin, L. M. Larsen, A. S. Epiney, and E. K. Worsham, "Literature review of advanced reactor cost estimates, Idaho National Laboratory (INL), Idaho Falls, ID, United States," 2023.

[62] T. Roulstone, C. Lloyd, and R. Lyons, "Small can be beautiful," *Nucl. Eng. Int. Mag.*, vol. 65, no. 797, pp. 83–89, 2020.

[63] C. Lewis, R. MacSweeney, M. Kirschel, W. Josten, T. Roulstone, and G. Locatelli, "Small modular reactors: Can building nuclear power become more cost-effective," *National Nuclear Laboratory: Cumbria, UK*, 2016.

[64] M. D. Carelli, C. W. Mycoff, P. Garrone, G. Locatelli, M. Mancini, M. E. Ricotti, A. Trianni, and P. Trucco, "Competitiveness of small-medium, new generation reactors: a comparative study on capital and O&M costs," in *Proc. Int. Conf. Nucl. Eng.*, vol. 48175, 2008, pp. 499–506.

[65] "Projected Costs of Generating Electricity," *International Energy Agency (IEA)*, 2020. [Online]. Available: https://www.iea.org/reports/projected-costs-of-generating-electricity-2020

[66] C. A. Lloyd, T. Roulstone, and R. E. Lyons, "Transport, constructability, and economic advantages of SMR modularization," *Prog. Nucl. Energy*, vol. 134, p. 103672, 2021.

Jonas Kristiansen Nøland (Senior Member, IEEE) was born in Drammen, Norway, in 1988. He received the M.Sc. degree in electric power engineering from the Chalmers University of Technology, Gothenburg, Sweden, in 2013, and the Ph.D. degree in engineering physics from Uppsala University, Uppsala, Sweden, in 2017. Since 2018, he has been an Associate Professor with the Department of Electric Energy, Norwegian University of Science and Technology (NTNU). He is currently involved in the NERES project, exploring nuclear energy's role in a renewable energy system. Dr. Nøland serves as an Associate Editor for the IEEE TRANSACTIONS ON ENERGY CONVERSION and the IEEE TRANSACTIONS ON INDUSTRIAL ELECTRONICS, and as the Chair of the IEEE Power and Energy Society (PES) Norwegian Chapter since 2022.

Martin N. Hjelmeland (Member, IEEE) received the M.Sc. degree and the Ph.D. degree in electric power engineering in 2015 and 2019, respectively, both from the Norwegian University of Science and Technology (NTNU), Trondheim, Norway. Earlier in his career, he focused on medium-term hydropower scheduling in multiple markets. Dr. Hjelmeland is currently a postdoctoral researcher at the Department of Electric Energy (IEL) at NTNU, where he is a member of the "Electricity Markets and Energy Systems Planning" (EMESP) research group. His research interests lie in the integration of low-carbon energy sources in the energy system, with a particular focus on the role of nuclear energy. He is currently involved in the strategic research project "Nuclear Energy's role in a Renewable Energy System (NERES)".

Christian Hartmann (Member, IEEE) received the M.Sc. degree in electric power engineering from the Norwegian University of Science and Technology (NTNU), Trondheim, Norway, in 1999, where is is currently pursuing a Ph.D. degree. He is a Senior Researcher with the Institute for Energy Technology (IFE). For the last decades, Mr. Hartmann has been involved in the OECD Halden Reactor Project, which is one of the longest research projects in the world. He regularly serves as a reviewer for several IEEE journals and conferences.

Lina Bertling Tjernberg (Senior Member, IEEE) was a Visiting Professor with Stanford University, in 2014, a Postdoctoral Researcher with the University of Toronto, from 2002 to 2003, and a Visiting Researcher with the University of Saskatchewan, in 2000. She is currently a Professor in power grid technology and the Director of the Energy Platform, KTH Royal Institute of Technology, Stockholm, Sweden. She has published over 100 articles and is an author of CRC Press with a book on *Infrastructure Asset Management with Power System Applications* (2018). Her research aims to develop models for electric power solutions for the future sustainable energy systems. Her current research interests also include applied reliability theory and maintenance management. Prof. Tjernberg was a member of the Swedish Government Coordination Council for Smart Grids, from 2012 to 2014, and has served as an expert for the EU Commission within Energy, ICT, and Security. She is currently a Fellow of IVA the Royal Swedish Academy of Engineering. She is a Distinguished Lecturer of the IEEE Power and Energy Society (PES) and the Past Chair of the Swedish PES/PELS Chapter. She has served on the Governing Board of the IEEE Power and Energy Society and as an Associate Editor for the IEEE TRANSACTIONS ON SMART GRID. She chaired the first IEEE ISGT Europe Conference in 2010.

Magnus Korpås (Member, IEEE) received the M.S. degree in theoretical physics and the Ph.D. degree in electric power engineering on the topic of optimizing the use of energy storage for dis- tributed wind energy in the power market from the Norwegian University of Science and Technology (NTNU), Trondheim, Norway, in 1998 and 2004, respectively.

From 2004 to 2006, he was a Postdoctoral Fellow with NTNU. He held several research positions (Scientist, Manager, Director) with SINTEF Energy, Trondheim, from 2006 to 2014, where he was a Leader and an active Participant in several large energy research projects at national and European levels. In 2014, he became a Full Professor with the Department of Electric Power Engineering, NTNU, where he established the Electricity Markets and Energy System Planning Research Group. He was a Visiting Researcher with the MIT Laboratory for Information and Decision Systems (LIDS), from 2018 to 2019. He is the Leader of the Scientific Committee, the work package on flexible resources in the power system with the Centre for Intelligent Electricity Distribution (CINELDI), and the work package Markets in the IEA Wind Task 25 (design and operation of energy systems with large amounts of variable renewable generation).